Distributor Netherlands
Hogetex / Kometex BV
Gesinkkampstraat 1
7051 HR Varsseveld
+31 (0)315-617171
www.hogetex.com
info@hogetex.com

Distributor Germany
Hogetex Deutschland GmbH
Am Hahnenbusch 14B
55268 Nieder-olm
+49 (0)6136-7628-0
www.hogetex.de
info@hogetex.de

Distributor Belgium
Hogetex Belgie BvbA
Kapelweg 132
2300 Turnhout
+32 (0)14-703-404
www.hogetex.be
info@hogetex.be

CITIZEN

PRECISION

MEASURING

Precision Measuring Instruments
General Catalog

INSTRUMENTS

2018-10-2000

CITIZEN FINEDEVICE CO., LTD.

No.E08

Grind, Measure and Assemble

Our mastery of the basics of craftsmanship is the proof of reliability

Through manufacturing watches that require absolute precision,
CITIZEN has continued to refine its technologies to "grind,"
"measure" and "assemble."
These three technologies are the basics of craftsmanship.
It is no exaggeration to say that CITIZEN is the only manufacturer of
measuring instruments that possesses all three of these technologies.
Our technical abilities, which have been proving their worth in
measurements of watch components requiring high precision in
micron units, have become the proof of reliability,
and they now contribute to measurements in various fields
including bearings, auto components and electronic components.

MEASURING INSTRUMENTS

page

Precision Measuring Instruments

Product Overview

Displacement Sensors

page 13 Digital Gauges

SA Series

Robust

The W-bearing structure enables the product to withstand 200 million sliding operations under a durability test in which load is applied in the vertical, horizontal, and oblique directions.

Accurate

Adoption of the absolute method significantly reduces counting errors compared to conventional digital gauges.

Wide product lineup

- **Air purge specification**
  Usable under environments in which the product is exposed to cutting fluid.
- **Pneumatic drive specification**
  Facilitates simplification of system design.
- **Abundant lineup of long-stroke products**
  Models with 10-mm, 32-mm, 50-mm sensor heads are available.

Controllers adapted to applications

One-channel type for desktop placement
Connectable type to accommodate up to 16 units
Multi-channel type focused on data output

PRECISION
MEASURING
INSTRUMENTS

page 25 Electric Micrometers

ELEMETRON

Can measure in units of 0.1 μm
The best choice for high-precision measurement.

Low-measuring-force type available
Can measure soft and fragile objects.

Long-selling products that use differential transformers

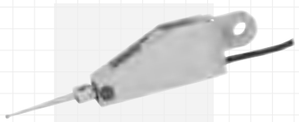

Electric Micrometer

Measuring Stand

Measuring Stands page 37

This lineup of horizontal stands facilitates measurement of product outer and inner diameters.

Measure with minimal error by attaching the SA series or Mu-METRON.

Measure unusually shaped workpieces or grooves by using special contact points.

Signal Indicators

TRI-METRON page 33

Micro indicators

Mu-METRON

Simple structure, no amplifier needed
The most cost-efficient option for simple pass/fail measurement.

High-precision micro indicators
Achieves high precision by adopting the mechanical structure of a watch.

Two types:
Mu-METRON high-precision micro indicators, and TRI-METRON incorporating electric contacts in Mu-METRON

Signal Indicator

Micro indicator

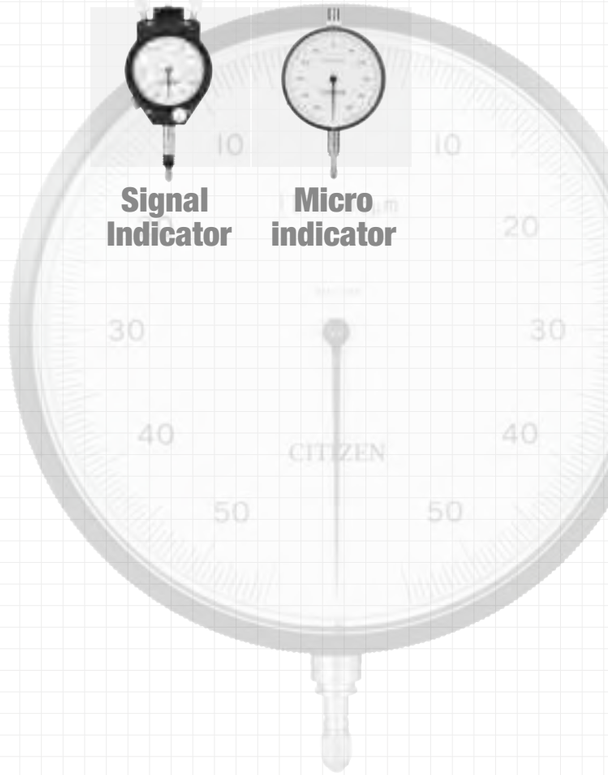

Lineup

	SA series	ELEMETRON
Measurement range	10 mm — 50 mm	±0.5 mm — ±1 mm
Resolution	0.1 μm・0.5 μm	0.1 μm

Resolution \ Measurement range	±0.5 mm	±0.7 mm	±1 mm	10 mm	32 mm	50 mm
0.1 μm	DTH - L□□ DTH - L□□U	DTH - P□□S DTH - P□□SH	DTH - P□□	SA - S110 SA - S110/03N SA - S110AP SA - S110PD		
0.5 μm				SA - S510 SA - S510/03N SA - S510AP SA - S510PD	SA - S532	SA - S550

Lineup

	TRI-METRON	Mu-METRON
Measurement range	±0.05 mm — ±0.6 mm	±0.05 mm
Resolution	1 μm — 20 μm	0.5 μm — 1 μm

Resolution \ Measurement range	±0.05 mm	±0.1 mm	±0.5 mm	±0.6 mm
0.5 μm	4M - 100P			
1 μm	1S - 100LP 1S - 100 2S - 100 2M - 100 3M - 100			
2 μm		2S - 200		
10 μm			1S - 010LP 1S - 010	2S - 010
20 μm			1S - 010FIS 2S - 010FIIS	

SA series product set

Sensor head, cable, controller, output cable

System

Sensor head

SA - S110
SA - S110/ 03N
SA - S110AP
SA - S110PD
SA - S510
SA - S510/ 03N
SA - S510AP
SA - S510PD
SA - S532
SA - S550

Cable

SA - CD - SH□M
SA - CD - SHL□M

SA - SD - SH□M
SA - SD - SHL□M

Controller

SA - CD1N

SA - CD1N/RS

SA - CD1N/BO

SA - SD 1AP
SA - SD 1AP-P
SA - SD 1AC
SA - SD 1AC-P
SA - SD 1C
SA - SD 1C-P
SA - SDNC

SA - MC8
SA - MC16

AC adapter

AC-001

Output cable

SA - CD - RS2

SA - CD - BCD2

Output unit

SA - ERS
SA - ECL

ELEMETRON product set

Sensor head, connection cable, amplifier, output cable/output card

0.1 μm

System

Sensor head

DTH - P
DTH - P□S
DTH - P - SH
DTH - L
DTH - L□U

Connection cable

3SEA - 2834

Amplifier

EM - SA1RP/ RS
EM - SA1RP/ AN

DTM - FAB

DTM - EA
DTM - EA/ H
DTM - ED

Output cable

EM - SA1-IA2
EM - SA1-IF2
EM - SA1-IO2
EM - SA1-RS2

Output card

DTM - FAB-BCD
DTM - FAB-RS

TRI-METRON product set

Sensor head, sequencer cable, sequencer

System

Sensor head

1S - □□□LP

1S - □□□
2S - □□□

Sequencer cable

TRC - 01

External equipment

Digital input equipment
Sequencer
NC,
etc.

Application

Positioning

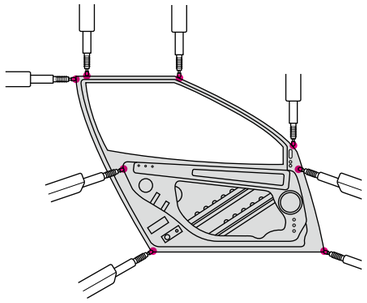

• Attachment positions are accurately determined by simultaneous multi-point measurement using multiple contact points.

Eccentricity measurement

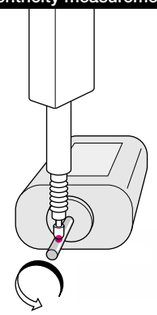

• Eccentricity of motor shafts used for windshield wipers or doors is measured while rotating the shafts at high speed.

With our precision measuring instruments,
all kinds of automobile components
can be measured.
Our instruments greatly contribute to
the modern automotive industry.

Automobile

Positioning & height measurement

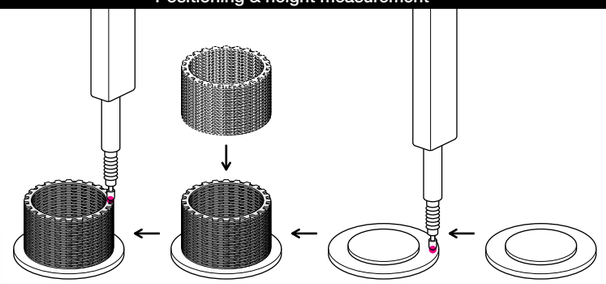

• Pass/fail judgments are made in each component assembly process based on height measurement.

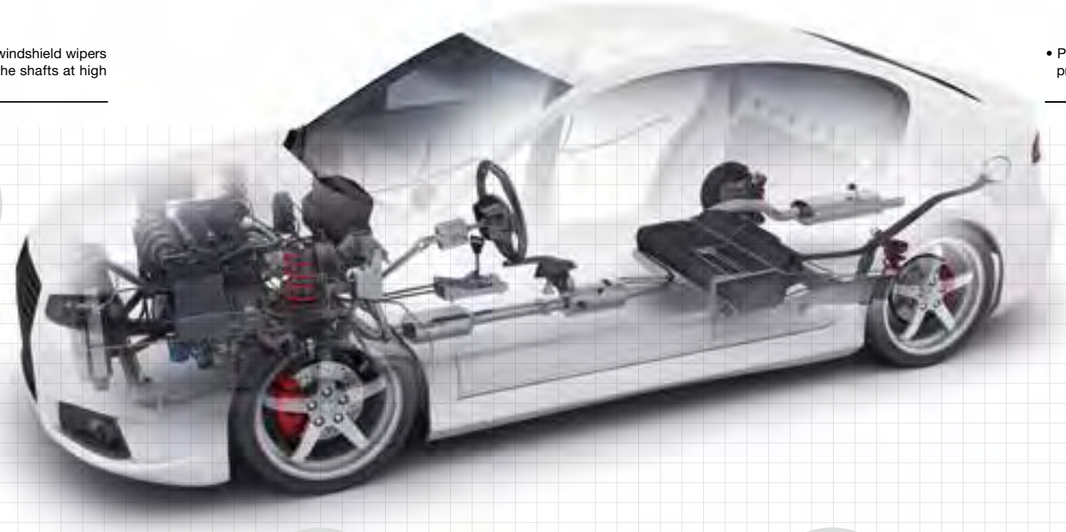

Doors

Motors

Transmissions

Steering

Brake discs

Crankshafts

Valves

Engine piston rings

Cylinder head covers
(Aluminum diecast products)

Angle & inner diameter measurement

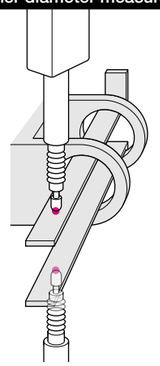

• Shaft inner and outer diameters are measured by two contact points.

Flatness measurement

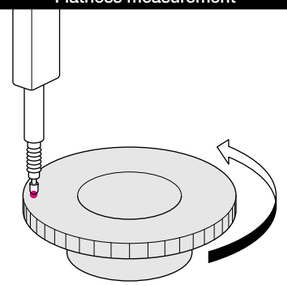

• Disc surface flatness is measured by one contact point while rotating the disc.

Shape, eccentricity, & crank journal runout measurement

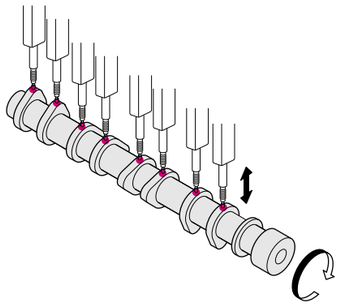

• All measurements required for shafts can be performed.

Outer diameter & height measurement

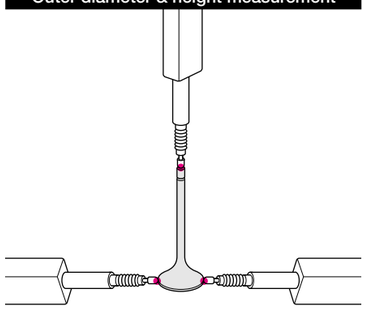

• Measurement is instantaneously performed by simultaneous multi-point measurements using multiple contact points.

Front-back judgment & inner diameter measurement

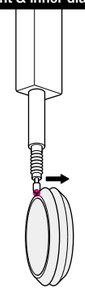

• Run the sensor over stacked piston rings to judge the front or back.

Height & flatness measurement

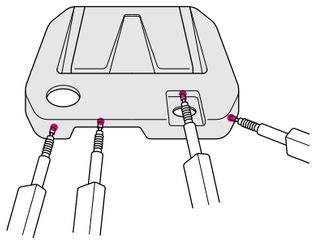

• Height and flatness are measured by simultaneous multi-point measurement using multiple contact points.

Application
Mobile Phone

The technologies we cultivated through measurement for watches, which are precision instruments, are used to measure the components of mobile phones, which are essential consumer products.

Positioning & thickness/height/flatness measurement

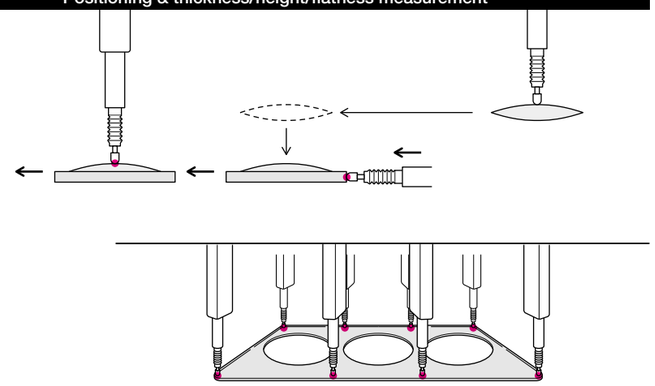

- Pass/fail judgments for the lens based on thickness, height, and flatness measurement. Accurate positioning during assembly and pass/fail judgment based on height measurement.

Mobile Phone

Camera lens cases

Batteries

Tablet surfaces

Chassis & covers

Height measurement

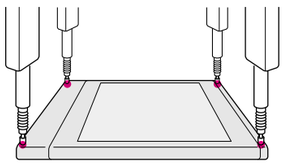

- Pass/fail judgments are made by comparison to the master gauge with one contact point.

Thickness & flatness measurement

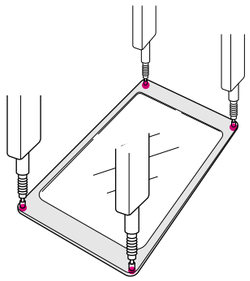

- Instantaneous judgment by multi-point measurement using multiple contact points.

Thickness & flatness measurement

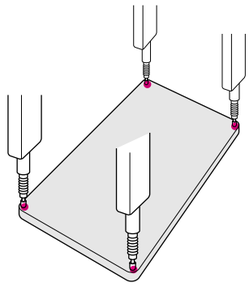

- Instantaneous judgment by multi-point measurement using multiple contact points.

Application
Bearing

Bearings are used in many industrial products. We have handled bearing measurement since our establishment, and we are the leaders in terms of experience and performance in Japan.

Height measurement

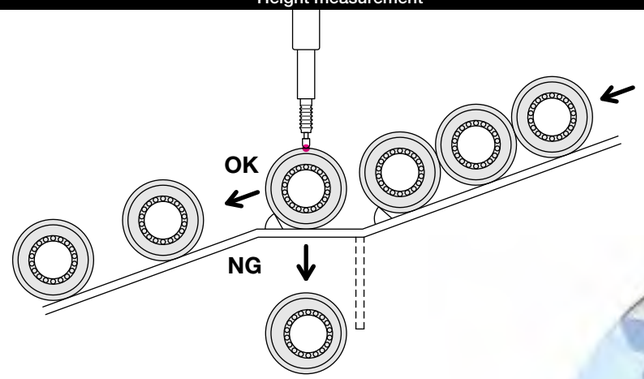

- Judgments are made based on height measurement in the final line after processing.

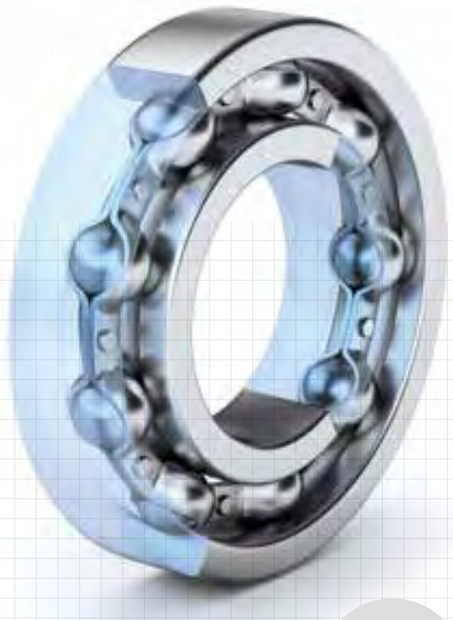

Bearing

Completed products

Ball bearing rings

Balls

Height measurement

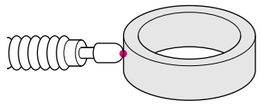

- Pass/fail judgments are made by comparison to the master gauge with one contact point.

Outer & inner diameter measurement

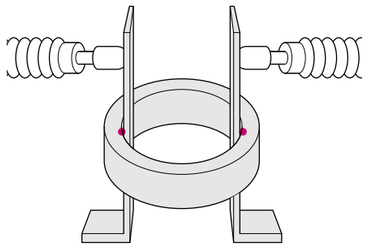

- Measurement is made with two contact points. Outer and inner diameters are measured in separate processes.

Height measurement

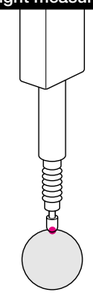

- Pass/fail judgments are made by comparison to the master gauge with one contact point.

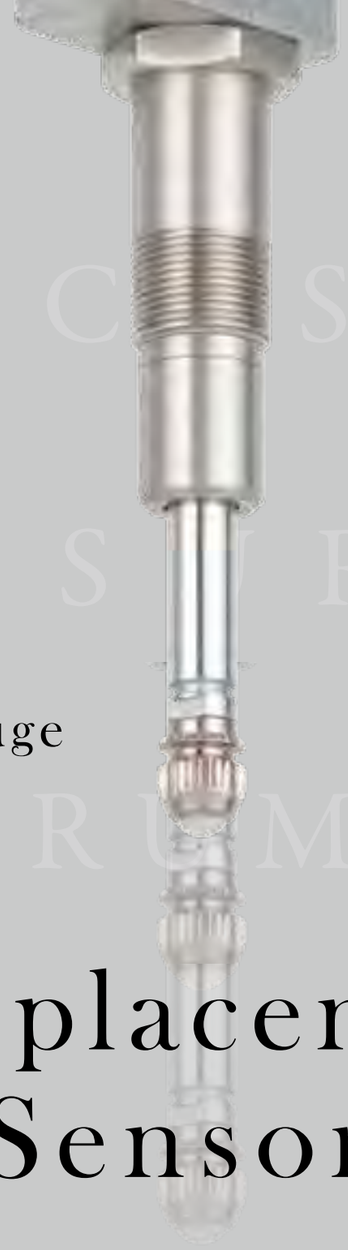

PRECISION MEASURING INSTRUMENTS

Digital Gauge

Displacement Sensors

The SA series of digital gauges adopt the absolute method and W-bearing structure to achieve superior precision and durability. The high-precision contact displacement sensor optically detects the spindle's absolute position and outputs data with a high resolution. The air purge specification type prevents the invasion of foreign objects from the outside by raising the inner pressure. This enables precise measurement in environments with liquids such as permeable oil, coolant liquids, and cutting fluids.

SA Series

The advanced absolute method eliminates counting errors

SA series displacement sensors adopt the optical absolute encoder method.
With this method, the absolute position is read instantaneously when the power is turned on, thereby eliminating the need for master adjustment, which has conventionally been required each time.
This method reduces the setup time for each use and improves your work efficiency.

Slim and tough W-bearing structure

Metal bearings are provided both above and below the measuring part, and they are housed inside a robust die-cast body to achieve extreme durability.
Their incredible robustness to vibrations, shocks, and lateral loads have earned customers' trust.

Detectors

Absolute method detectors

SA-S110, SA-S110/03N
SA-S510, SA-S510/03N
SA-S532
SA-S550
SA-S110AP / SA-S510AP
Air purge specification
SA-S110PD / SA-S510PD
Pneumatic drive specification

Controllers

Controllers for SA series detectors

SA-CD
SA-SD
SA-MC8 / SA-MC16
SA-ERS
SA-ECL

Accessories

Controllers for SA series detectors

SA connector cables
SA-CD
SA-SD

Output cables
SA-CD-RS2
SA-CD-BCD2

AC Adapter
AC-001
For SA-CD1N
For SA-CD1N/BO
For SA-CD1N/RS

Contact points
F-001, 101, 201, 301
F-002
F-171
F-105
F-106
F-501
F-502
F-503
F-504
F-505
F-507
F-508

Rubber bellows
M-137
For SA-S510, 110
M-142
For SA-S532
M-143
For SA-S550

Finger lever
M-129

Indicator bush
M-150

Lug holder
SMA-0417

0.1 μm Resolution	1.65 N Measuring Force	0.35 N Measuring Force	10 mm Measurement Range	8 mm Stem Diameter

0.5 μm Resolution	1.65 N Measuring Force	0.35 N Measuring Force	10 mm Measurement Range	8 mm Stem Diameter

SA-S110, SA-S110/03N | SA-S510, SA-S510/03N

This series of sensors achieves high durability owing to the W-bearing structure and die-cast body. The series also eliminates counting errors by adopting the absolute method.
In addition to a minimum resolution of 0.5 μm (SA-S510, SA-S510/03N), high resolution products with a resolution of 0.1 μm are also available (SA-S110, SA-S110/03N). The series demonstrates superb capabilities in various measuring situations.

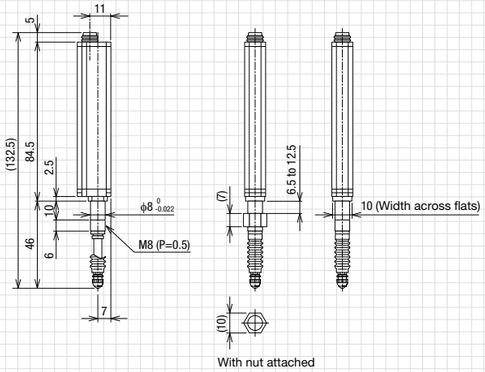

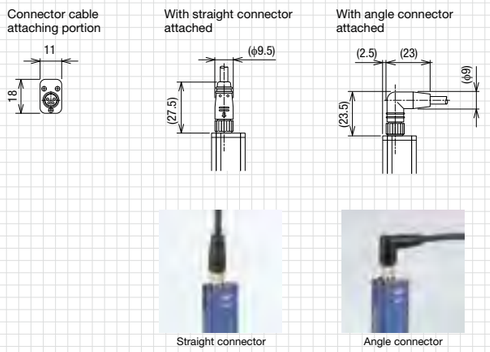

Model	SA-S110, SA-S110/03N	SA-S510, SA-S510/03N
Measurement method	Optical absolute linear encoder method	
Measurement range	10 mm	
Resolution	0.1 μm	0.5 μm
Indication accuracy (P-P) *1	1.0 μm	2.0 μm
Measuring force *2	1.65 N or less (SA-S□10) / 0.35 N or less (SA-S□10/03N)	
Ingress protection rating *3	Equivalent to IP67	
Weight	Approx. 80 g	
Cable	Sold separately as an option	
Measuring probe	Ceramic sphere (diameter: 3.175 mm)	
Rubber bellows*4	Material: NBR	

*1 At an ambient temperature of 20°C
*2 When the measuring probe is pushed vertically down by 10 mm
(For SA-S□10/03N, this indicates the value when no rubber bellows have been installed.)
*3 Only when the rubber bellows is attached properly and is not damaged
*4 For SA-S□10/03N, no rubber bellows are attached.

0.5 μm Resolution	32 mm Measurement Range	12 mm Stem Diameter

SA-S532

A long stroke of 32 mm extends the measurement range while maintaining high durability.

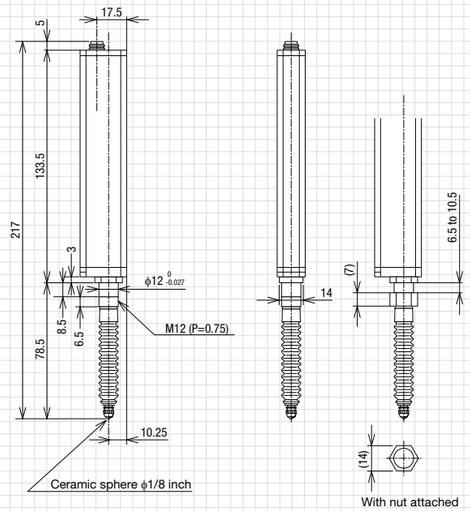

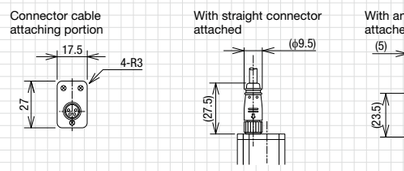

Model	SA-S532
Measurement method	Optical absolute encoder method
Measurement range	32 mm
Resolution	0.5 μm
Indication accuracy (P-P) *1	3 μm or less
Measuring force *2	2.97 N or less
Ingress protection rating *3	Equivalent to IP67
Weight	Approx. 150 g
Cable	Sold separately as an option
Measuring probe	Ceramic sphere (diameter: 3.175 mm)
Rubber bellows	Material: NBR

*1 At an ambient temperature of 20°C
*2 When the measuring probe is pushed vertically down by 32 mm
*3 Only when the rubber bellows is attached properly and is not damaged

0.5 µm Resolution | 50 mm Measurement Range | 12 mm Stem Diameter

SA-S550

An ultra-long stroke of 50 mm easily accommodates measurements of large components.

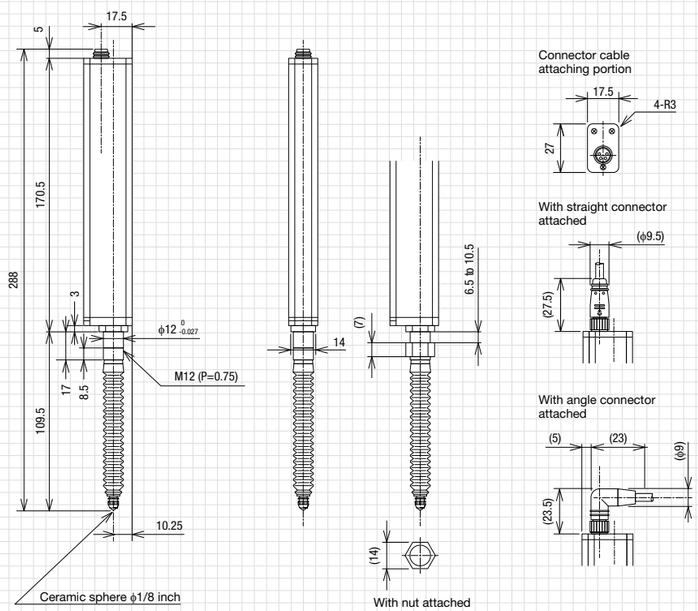

Model	SA-S550
Measurement method	Optical absolute linear encoder method
Measurement range	50 mm
Display resolution	0.5 µm
Indication accuracy (P-P) *1	3.5 µm or less
Measuring force *2	3.5 N or less
Ingress protection rating *3	Equivalent to IP67
Weight	Approx. 250 g
Cable	Sold separately as an option
Measuring probe	Ceramic sphere (diameter: 3.175 mm)
Rubber bellows	Material: NBR

*1 At an ambient temperature of 20°C
*2 When the measuring probe is pushed vertically down by 50 mm
*3 Only when the rubber bellows is attached properly and is not damaged

0.1 µm Resolution | 0.5 µm Resolution | 10 mm Measurement Range | 8 mm Stem Diameter

SA-S110AP / SA-S510AP (Air Purge Specification)

Air purge technology provides the ultimate environmental performance.
The body's inner pressure is raised by air-purging, which prevents foreign objects from invading. These sensors exhibit strong performance in severe environments where they are exposed to liquids such as permeable oil, coolant liquids, and cutting fluids.

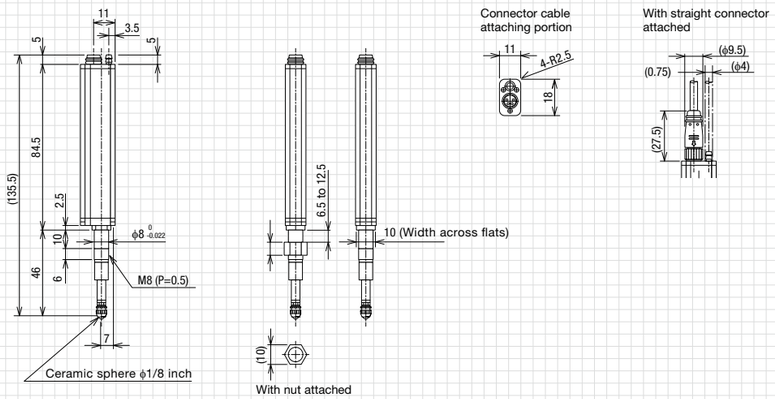

Model	SA-S110AP	SA-S510AP
Position detection method	Optical absolute encoder method	
Measurement range	10 mm	
Used fluid	Air	
Operating pressure range	0.05 to 0.10 MPa	
Air tube specification	Outer diameter: 4 mm / Inner diameter: 2.5 mm	
Withstand pressure	0.2 MPa	
Measuring force	1.5 to 3 N *2	
Resolution	0.1 µm	0.5 µm
Indication accuracy (P-P) *1	1.0 µm or less	2.0 µm or less
Weight	Approx. 80 g	
Ingress protection rating *3	Equivalent to IP67	
Cable *4	Sold separately as an option	
Measuring probe	Ceramic sphere (diameter: 3.175 mm)	

*1 At an ambient temperature of 20°C
*2 This value depends on the supplied air pressure as well as the assembling accuracy of the product and wear of the sealing material (O-ring).
*3 This applies only when the air tube is connected and the sealing part is not degraded or damaged.
*4 Angle-type connector cables cannot be used.
◇No rubber bellows are attached.

0.1 µm Resolution | 0.5 µm Resolution | 10 mm Measurement Range | 8 mm Stem Diameter

SA-S110PD / SA-S510PD (Pneumatic Drive Specification)

The pneumatic drive structure, which moves the spindle up and down with air, significantly simplifies the system design process while increasing measurement speed.

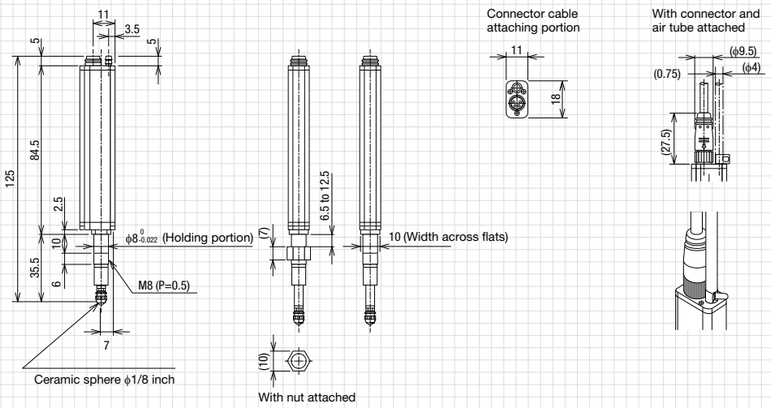

Model	SA-S110PD	SA-S510PD
Position detection method	Optical absolute encoder method	
Measurement range	10 mm	
Resolution	0.1 µm	0.5 µm
Indication accuracy (P-P) *1	1 µm or less	2 µm or less
Measuring force	*2	
Fluid used	Dry air	
Operating pressure range	0.14 to 0.16 MPa *3	
Air tube specification	Outer diameter: 4 mm / Inner diameter: 2.5 mm	
Withstand pressure	0.2 MPa	
Ingress protection rating *4	Equivalent to IP67	
Weight	Approx. 80 g	
Cable *5	Sold separately as an option	
Measuring probe	Ceramic sphere (diameter: 3.175 mm)	

*1 At an ambient temperature of 20°C
*2 The measuring force depends on the air pressure used.
Remove the seal cap to use this sensor as a low measurement force type.
*3 This value depends on the supplied air pressure as well as the assembling accuracy of the product and wear of the sealing material (O-ring).
*4 This applies only when the air tube is connected and the sealing part is not degraded or damaged.
*5 Angle-type connector cables cannot be used.
◇No rubber bellows are attached.

I/O Output | RS-232C Output | BCD Output

SA-CD

A one-channel type compact controller. The backlight changes between red and green, making it easy to recognize judgment results.

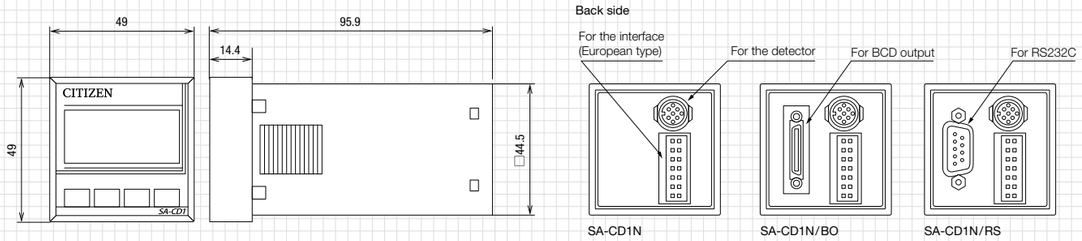

Model		SA-CD1N	SA-CD1N/BO	SA-CD1N/RS
Display		LCD with green/red backlight that displays polarity, 6-digit value, and mode		
Display resolution *1		0.1 µm / 1 µm / 10 µm		
Display range		- 99.9999 to 99.9999 mm		
Input/ Output	I/O	○ (-NG / OK / +NG / Error)		
	BCD	—	○	—
	RS	—	—	○
No. of detector inputs		1 ch		
Data hold method		Data hold with external signals		
Sorting function		7-level display (Up to 7 types can be registered.)		
Peak measurement		Maximum, minimum, maximum-minimum, maximum-minimum/2		
Power supply voltage		12-24 V DC (±10%)		
Consumption current		200 mA or less (when the sensor head is connected)		
Accessories		Panel mount frame		
Specialty options (Sold separately)		—	Cable for BCD output	RS232C cable *2
			SA-CD-B02M	SA-CD-RS2M
AC adapter		AC-001		

*1 Depends on the resolution of the sensor head used.
*2 If EXT RS IN (trigger) is not needed, a commercially available interlink cable can be used.

See tolerance judgment results at a glance

Depending on the setting value, the backlight changes to green (OK/pass) or red (NG/fail), making it easy to recognize judgment results even from a distance.

High usability with a 7-level sorting function

Three types of output terminals

In addition to the standard type, the BCD type and RS-232C output model are available. Choose the model that best suits your facilities.

Standard type (I/O connector only)

BCD type

RS232C type

I/O
Output

SA-SD1AP / SD1AC / SD1C / SDNC

Compact controllers for connecting up to 16 units. Use a DIN rail to connect.

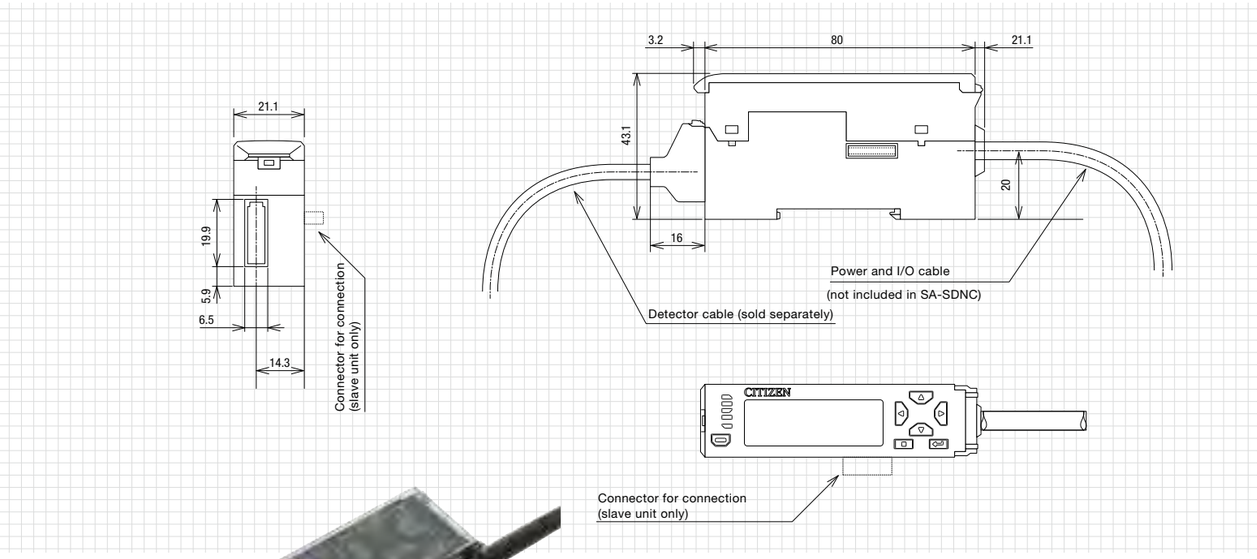

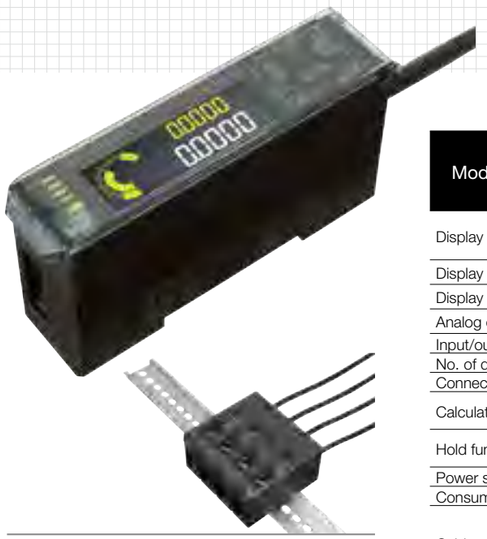

Model	Type	Master unit	Slave unit		
	NPN	SA-SD1AP	SA-SD1AC	SA-SD1C	SA-SDNC
	PNP	SA-SD1AP-P	SA-SD1AC-P	SA-SD1C-P	
Display		Omnidirectional VA LCD			
		Polarity, measurement value (2-line display), and circle meter display			
Display resolution *1		0.1 µm / 1 µm / 10 µm / 100 µm			
Display range		- 199.9999 to 199.9999 mm			
Analog output		○ (4 to 20 mA)		—	
Input/output		○			—
No. of detector inputs		1 ch			
Connection function		Up to 15 slave units can be connected to one master unit.			
Calculation function		Maximum value, minimum value, flatness, average value, deviation, distortion, warpage, thickness			
Hold function		Sample hold, maximum, minimum, maximum - minimum, maximum - minimum/2, etc.			
Power supply voltage		24 V DC (±10%)			
Consumption current *2		70 mA or less (when the sensor head is connected)			
Cable		2-m composite cable for power supply, analog output, and I/O	2-m composite cable for analog output and I/O	2-m cable for I/O	—

*1 Depends on the resolution of the sensor head used.
*2 The consumption current does not include analog current output.
◇When using the communication unit (SA-ERS), up to 14 slave units can be connected.

CE

An ultra-compact body equipped with various functions
Supports connection of up to 16 units

Up to 15 slave units can be connected to one master unit, and all the controllers can be centrally controlled. Multi-point calculation can also be easily performed. In addition, the ultra-compact body has guide tabs for DIN rails, allowing for easy connection with other controllers in lines.
* Up to 14 slave units can be connected when using the communication unit.

Link-up installation on a DIN rail

Dual digital display for a wide range of uses

Easy-to-read VA high contrast LCD

Self-diagnosis and notification of disconnections & abnormalities

The controller detects when a sensor head failure occurs, or when a cable is not connected or becomes disconnected, and immediately notifies you by displaying an error.

RS-485
Output

SA-ERS

This communication unit supports MODBUS RS485.
It enables speedy data communication.

Model	SA-ERS
Supported controller	SA-SD□
No. of connectable controllers	Up to 15 controllers (1 master unit, 14 slave units) can be connected to a single SA-ERS.
Electrical characteristics	EIA RS-485 compliant
Communication method	Two-wire half-duplex communication
Communication protocol	MODBUS (RTU/ASCII) / MEWTOCOL-COM*1
Power supply voltage *2	24 V DC (±10%)
Consumption current	40 mA or less

*1 MEWTOCOL is a registered trademark of Panasonic Industrial Devices SUNX Co., Ltd.
*2 Power is supplied from the connected controller master unit.

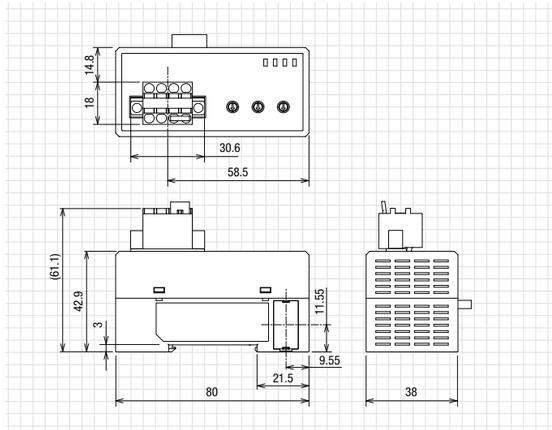

Specifically for SA-SD controllers to integrate measurement and monitoring systems

SA-ERS can be easily connected to controllers using the integrated communication connector specifically for SA-SD controllers, which can also easily be removed. Up to 15 controllers (1 master unit + 14 slave units) can be connected to a single SA-ERS unit.

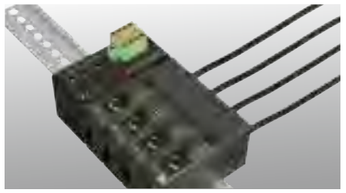

Installed on a 35-mm DIN rail

Optimal for large-scale systems with support for high-speed MODBUS.

Receives power from the SA-SD controller main unit.

Also, supports MEWTOCOL*communication.

* MEWTOCOL is a registered trademark of Panasonic Industrial Devices SUNX Co., Ltd.

CC-Link
Output

SA-ECL

This communication unit supports CC-Link.
It enables high speed communication up to 10 Mbps.

Model	SA-ECL				
Supported controller	SA-SD□				
Number of connectable controllers	Up to 15 controllers (1 master unit, 14 slave units) can be connected to a single SA-ECL unit.				
Power supply voltage *1	24 V DC ±10 %, including 0.5 V ripple (P-P)				
Consumption current	80 mA or less				
Communication method	CC-Link ver. 1.10/ver. 2.00 (switchable) *2				
Remote station classification	Remote device station				
No. of occupied stations	CC-Ling ver. 1.10: 4 stations, ver. 2.00: 2 stations (switchable)				
Station No. setting	1 to 64 (0 or 65 and above will cause an error.)				
Communication speed	156 Kbps	625 Kbps	2.5 Mbps	5 Mbps	10 Mbps
Max. transmission distance	1,200 m	900 m	400 m	160 m	100 m
Operating ambient temperature	-10 to 45°C (no dew condensation or freezing allowed) In storage: -20 to +60°C				
Operating ambient humidity	35 to 85% RH, in storage: 35 to 85% RH				
Material	Main body case: PC				
Weight	Approx. 80 g				

*1 Power is supplied from the connected controller master unit.
*2 CC-Link is a registered trademark of Mitsubishi Electric Corporation that is managed by the CC-Link Partner Association (CLPA).

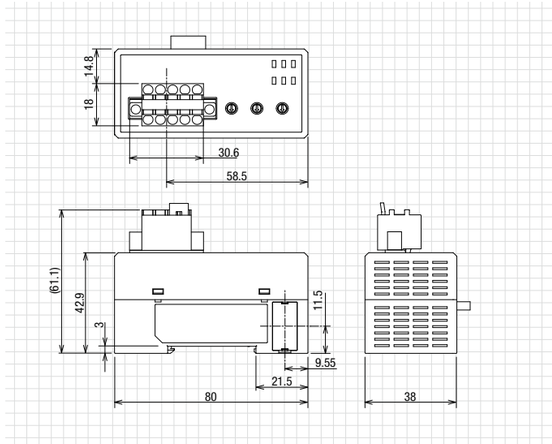

RS-232C
Output

SA-MC8 / SA-MC16

These multi-channel type controllers are specifically for RS-232C data output.
8-channel and 16-channel types are available.

SA-MC8

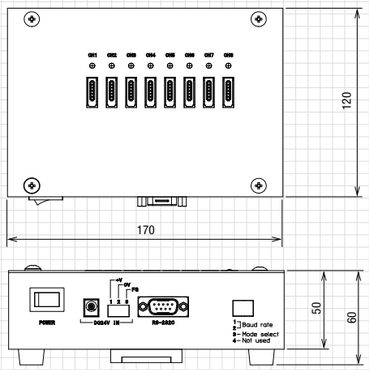

SA-MC16

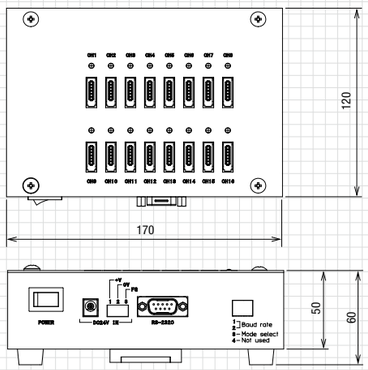

SA-MC8

SA-MC16

Model	SA-MC8	SA-MC16
Display	Status display LED for each channel	
Resolution *1	0.1 μm	
Display range	-99.9999 to 99.9999 mm	
No. of sensor head inputs	8 channels	16 channels
External output	Equipped with RS-232C output terminal (measurement data output)	
Power supply voltage	24 V DC (±10%)	
Consumption current	500 mA or less (with sensor head connected)	

*1 Depends on the resolution of the sensor head used.

Supports the SA series. Enables easy, convenient multi-point measurement.

These controllers are sized to be easily handled and enable you to build a safe, reliable multi-point measurement system. They can easily realize a multi-channel system while meeting the constraints for general-purpose communication via RS-232C. Measurement data can be output from up to 16 channels.

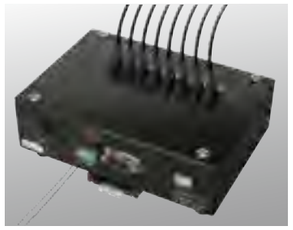

Easy-to-see status LED lamp with a simple display

8-channel and 16-channel types available

DIN rail guide

Both SA-MC8 and SA-MC16 can be installed on DIN rails.

PRECISION MEASURING INSTRUMENTS

Electric Micrometer

Displacement Sensors

The ELEMETRON electric micrometers are long-selling products that employ differential transformers to accommodate any measuring conditions with a variety of specifications. These products are optimal for high-precision measurement that requires readings in 0.1-µm units or measurement that requires low measuring force (0.1 g). Besides the standard plunger type, we offer a universal type (lever type) that can freely change the measurement direction and is suitable for measuring objects susceptible to damage or deformation as well as a small-size type that is useful for making measurements in small spaces.

Electric Micrometer

ELEMETRON

Plunger

Plunger type

This is the standard sensor head.
A contact point is attached to the tip of the plunger held by the ball retainer and spring.
Thanks to its durable body, this type can accurately measure various targets even in environments with extreme temperature fluctuations.

Universal

Universal type (lever type)

The strong lever bearing mechanism is resistant to breakage caused by large loads or fluctuations.
In addition, since the measuring direction can be changed freely, this type can be used in any location, freeing you of concern about damaging or deforming measurement targets.
This type is suitable for measuring bearing runout, etc.

Detectors

Electric Micrometers
ELEMETRON

DTH-P
DTH-P□S
DTH-P-SH
DTH-L
DTH-L□U

Amplifiers

Electric Micrometers
ELEMETRON

EM-SA1R
DTM-FAB
DTM-EA
DTA-EA / H
DTM-ED

Measurement range

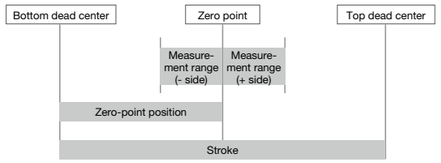

Accessories

Electric Micrometers
ELEMETRON

Output cable
EM-SA1-IA2
EM-SA1-IF2
EM-SA1-IO2
EM-SA1-RS2

Conversion cable
3SEA-2834

Contact point
F-001, 101, 201, 301
F-002
F-171
F-105
F-106
F-501
F-502
F-503
F-504
F-505
F-507
F-508

Rubber bellows
M-131

Finger lever
M-129

Indicator bush
M-150

Lug holder
SMA-0417

DTH-P

0.1	0.2	0.4	0.7	±1	3	8
µm	N	N	N	mm	m	mm
Resolution	Measuring Force	Measuring Force	Measuring Force	Measurement Range	Cable Length	Stem Diameter

Optimal for measurement that requires a low measuring force.
We offer products for various measuring forces.

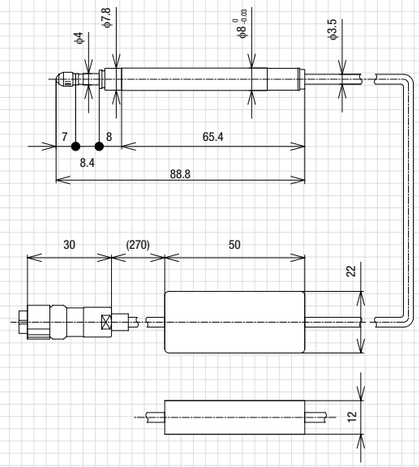

Model		DTH-P20	DTH-P40	DTH-P70	DTH-P16AL
Measuring force		0.196N	0.392N	0.686N	0.157N
Measurement range		±1 mm (-0.4 to +1 mm for type A)			
Stroke		4 mm (3.5 mm for type A)			
Zero-point position		Approx. 2 mm (0.5 mm for type A)			
Repeatability		0.3 µm			
Accuracy guaranteed temperature range		24°C±5°C			
Operating temperature range		0 to 50°C			
Weight (main body only)		Approx. 25 g			
Standard specifications	Cable length	3 m			
	Contact point	F-001			
	Rubber bellows	M-131			

◇All measuring forces are for the state in which no rubber bellows is attached. (The measuring force is about 5 to 15 g higher if a rubber bellows is attached.)

DTH-P□S

0.1	0.2	0.4	0.7	±0.7	3	8
µm	N	N	N	mm	m	mm
Resolution	Measuring Force	Measuring Force	Measuring Force	Measurement Range	Cable Length	Stem Diameter

Small in size and optimal for installation in a machine

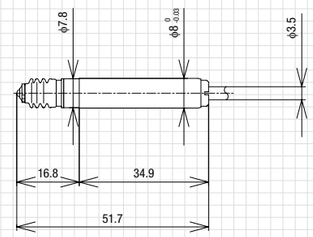

Model		DTH-P20S	DTH-P40S	DTH-P70S
Measuring force		0.196N	0.392N	0.686N
Measurement range		±0.7 mm		
Stroke		2 mm		
Zero-point position		Approx. 1 mm		
Repeatability		0.3 µm		
Accuracy guaranteed temperature range		24°C±5°C		
Operating temperature range		0 to 50°C		
Weight (main body only)		Approx. 20 g		
Standard specifications	Cable length	3 m		
	Contact point	F-171		
	Rubber bellows	M-131		

◇All measuring forces are for the state in which no rubber bellows is attached. (The measuring force is about 5 to 15 g higher if a rubber bellows is attached.)

DTH-P-SH

0.1	0.2	0.4	0.7	±0.7	3	8
µm	N	N	N	mm	m	mm
Resolution	Measuring Force	Measuring Force	Measuring Force	Measurement Range	Cable Length	Stem Diameter

Small in size with a laterally connected cord

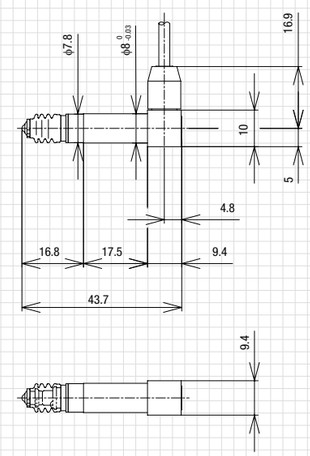

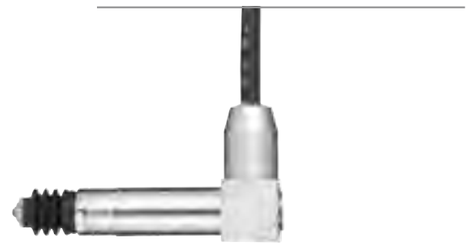

Model		DTH-P20SH	DTH-P40SH	DTH-P70SH
Measuring force		0.196N	0.392N	0.686N
Measurement range		±0.7mm		
Stroke		2 mm		
Zero-point position		Approx. 1 mm		
Repeatability		0.3 µm		
Accuracy guaranteed temperature range		24°C±5°C		
Operating temperature range		0 to 50°C		
Weight (main body only)		Approx. 20 g		
Standard specifications	Cable length	3 m		
	Contact point	F-171		
	Rubber bellows	M-131		

◇All measuring forces are for the state in which no rubber bellows is attached. (The measuring force is about 5 to 15 g higher if a rubber bellows is attached.)

DTH-L

0.1	0.02	0.08	0.15	±0.5	3
µm Resolution	N Measuring Force	N Measuring Force	N Measuring Force	mm Measurement Range	m Cable Length

The lever-type sensor is optimal for measuring flatness and roundness.

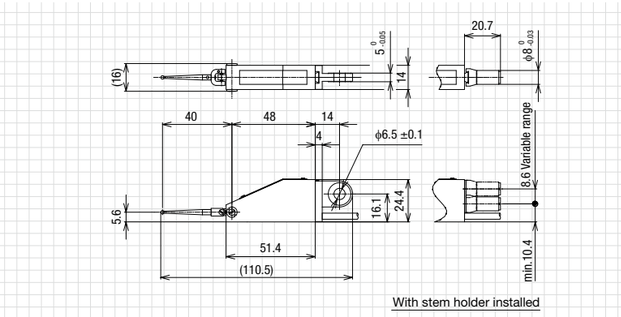

Model		DTH-L02	DTH-L08	DTH-L15
Measuring force		0.0196N	0.0785N	0.147N
Measurement range		±0.5 mm		
Stroke		1.5 mm		
Zero-point position		Approx. 0.5 mm		
Repeatability		0.3 µm		
Accuracy guaranteed temperature range		24°C±5°C		
Operating temperature range		0 to 50°C		
Weight (main body only)		Approx. 115 g		
Standard specifications	Cable length	3 m		
	Contact point	F-138		

DTH-L□U

0.1	0.02	0.08	0.15	±0.5	3
µm Resolution	N Measuring Force	N Measuring Force	N Measuring Force	mm Measurement Range	m Cable Length

The universal lever-type sensor enables the measurement direction to be changed up to 80° to the right and to the left.

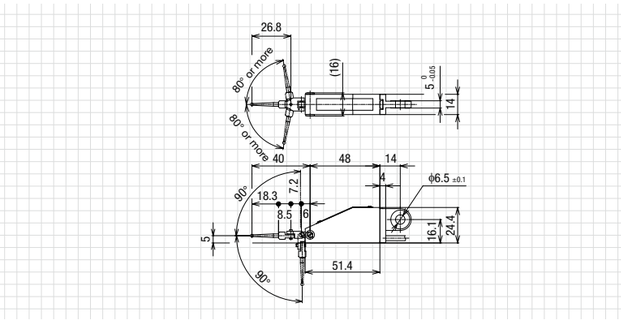

Model		DTH-L02U	DTH-L08U	DTH-L15U
Measuring force		0.0196N	0.0785N	0.147N
Measurement range		±0.5 mm		
Stroke		1.5 mm		
Zero-point position		Approx. 0.5 mm		
Repeatability		0.3 µm		
Accuracy guaranteed temperature range		24°C±5°C		
Operating temperature range		0 to 50°C		
Weight (main body only)		Approx. 115 g		
Standard specifications	Cable length	3 m		
	Contact point	F-118		

EM-SA1R

RS-232C	Analog
Output	Output

This small-size amplifier enables up to eight units to be linked.

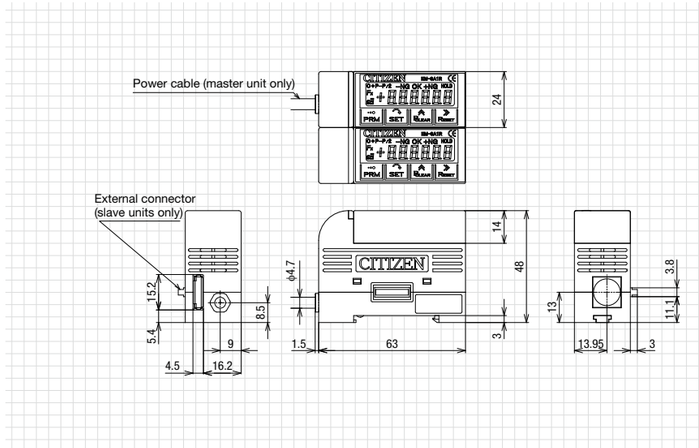

Model	EM-SA1RP/RS (Master unit)	EM-SA1RP/AN (Master unit)	EM-SA1RC (Slave unit)
Display	LCD with 6 digits/polarity, mode display, and 2-color backlight (red/green)		
Display resolution	0.1 / 1 / 10 µm (selectable by setting)		
Display range	-99.9999 to +99.9999 mm		
Indication error	±1% ±1 digit		
Response speed	Reset / Peak clear / Hold: Max 20 ms		
	RS-232C communication: Approx. 2 × n units + 3 ms		
Fault detection	-NG / OK / +NG / 6-rank judgement		
RS-232C *1	Available	None	None
Analog output *1	None	Available	Available
No. of detector inputs	1 ch		
Zero set function	Can be reset by the switch on the front face or at any position by an external signal or the RS command.		
Data hold method	Hold of the display and data by an external signal		
Measuring direction	+/- (Can be switched by a setting)		
Preset function	6 digits & polarity		
Peak measurement	+P, -P, P-P, (P-P)/2 (+P: Maximum, -P: Minimum)		
Error functionality	Available		
Measurement condition registration	Seven items (key, RS command)		
Accuracy guaranteed temperature range	24°C ±5°C		
Operating ambient temperature	0 to +40°C (no dew condensation or freezing allowed), in storage: -10 to +60°C		
Power supply	12 V DC ± 10% or 24 V DC ± 10%		
Consumption current	100 mA or less		
Weight	Approx. 110 g		Approx. 60 g
Dimensions	63 (W) × 24 (H) × 48 (D) mm		
Applicable standards	EMC Directive (EN61326-1:2006)		

*1 An optional dedicated cable is required. Note that analog output supports absolute value display.

Sorting into 7 ranks

Register up to 7 types of measuring conditions

Using the switches on the front face or by input via the interface, you can easily register up to seven output judgment values for measuring conditions in order to categorize and sort. For example, this allows you to broaden the range of control for the peak measurement function.

AN Analog supported

Supports RS-232C and analog output

Using an optional cable with each dedicated amplifier makes it simple to introduce the product in your current environment.
This is also ideal for delicate lines that require visibility.

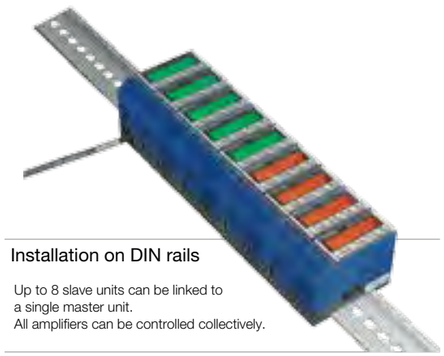

Installation on DIN rails

Up to 8 slave units can be linked to a single master unit.
All amplifiers can be controlled collectively.

Confirm Pass or Fail at a glance with the 2-color (red/green) display

The backlight switches between green (Pass) and red (Fail) in accordance with the set value. This makes it easy to confirm judgment results even from a distance. You are also notified immediately if an error occurs by a red backlight and error indication.

Innovative, compact form enables various kinds of link-up installations

Because the display unit is detachable, it can be removed from the amplifier's body and mounted on a panel. Arranging the elements close together helps save space in the system.
* For panel mounting, the optional display mounting unit (EM-SA1-DPM) is required.

While maintaining high sensitivity and high accuracy with a resolution of 0.1 µm, the Elemetron EM-SA1R has an ultra-compact form with a volume just one-fiftieth that of previous models. Additionally, new functions that enable multiple point measurement have been added (such as link-up installation and batch control by combining base and client devices). Thus, space savings are achieved while expanding upon the range of functions offered previously.

Conversion cable

Model	Dimensions	Product No.
	15 cm	3SEA-2834

◇The conversion cable (3SEA-2834) is required to connect to conventional detectors.

DTM-FAB

RS-232C Output | BCD Output

These flexible amplifiers can be used in a wide range of applications.
All the modes are arranged on the front panel, enabling easy operation.

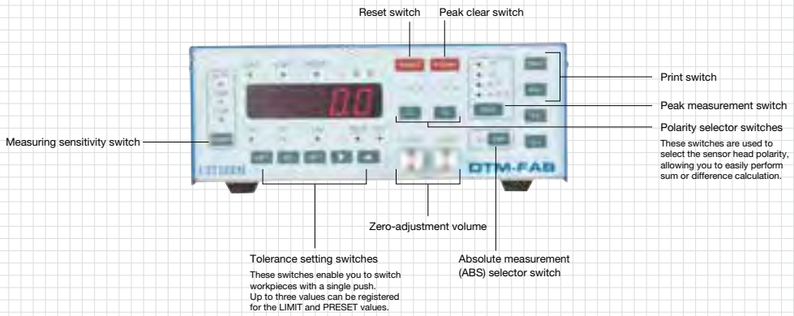

Model		DTM-FAB
Sensitivity selection	HIGH	±999.9 µm, resolution: 0.1 µm
	LOW	±1999 µm, resolution: 1 µm *1
	AUTO	Automatic selection of HIGH or LOW
Indication error		±1% rdg ±1 digit
Zero-point adjustment range		±20 µm or more
Display		4-digit LED display & polarity (-)
Input/ Output	I/O connector	○ (-NG/OK/+NG, error) *2
	RS-232C	DTM-FAB-RS (optional interface card) *3
	BCD	DTM-FAB-BCD (optional interface card) *3
	Analog output	○ (DC±1 V/full scale) *4
No. of sensor head inputs		2 channels
I/O slot		One I/O interface card can be inserted.
Simple measurement		+A, -A, +B, -B
Sum or difference		+A+B, +A-B, -A+B, -A-B
Reset method		Can be reset by the front switch or at any point by an external signal.
Data hold method		Hold of the display and data by an external signal
Preset function		4 digits & polarity
Measurement condition registration		3 types
Peak measurement		+P, -P, P-P, (P-P)/2 (+P: Maximum, -P: Minimum)
Accuracy guaranteed temperature range		24°C±5°C
Operating temperature range		0°C to 40°C
Power supply		100 V to 240 V AC ±10% 50/60 Hz 10 VA *5
Dimensions		204 (W) × 240 (D) × 82 (H) mm
Weight		Approx. 2.2 kg

*1 The performance assurance range is ±999 µm when LOW is selected.
*2 Applicable connector: RDAD-15SE1/M2.6 (55) (Hirose) or equivalent
*3 An optional I/O interface card is required. (See p. 00.)
*4 DC±1 V is the output at ±100.0 µm when HIGH is selected and ±100 µm when LOW is selected.
*5 The power cable attached to the unit has a rating of 125 V/10 A. If using the unit with a higher voltage, procure and use a high-voltage cable with a suitable rating.

DTM-EA DTM-EA / H

Analog Output

This analog indication type is equipped with a sensitivity selection function (three ranks).

Model		DTM-EA	DTM-EA/H
Sensitivity selection	HIGH	±5 µm (Graduation: 0.2 µm)	±2.5 µm (Graduation: 0.1 µm)
	LOW	±25 µm (Graduation: 1 µm)	±25 µm (Graduation: 1 µm)
	AUTO	±125 µm (Graduation: 5 µm)	±125 µm (Graduation: 5 µm)
Indication error		HIGH: Within ±1 graduation MED/LOW: Within ±1/2 graduation	
Zero-point adjustment range		±50 µm or more	
Display		—	
Response speed		(Pointer) Approx. 0.5 sec/full scale	
Analog output		DC±1 V/full scale*	
Accuracy guaranteed temperature range		24°C ±5°C	
Operating temperature range		0°C to 50°C	
Power supply		100 to 240 V AC ± 10% 50/60 Hz Approx. 4 VA *1	
Dimensions		110 (W) × 175 (D) × 185 (H) mm	
Weight		Approx. 1.1 kg	

* The power cable attached to the unit has a rating of 125 V/10 A. If using the unit with a higher voltage, procure and use a high-voltage cable with a suitable rating.

DTM-ED

Analog Output

This digital indication type is equipped with a sensitivity selection function (two ranks).

Model		DTM-ED
Sensitivity selection	HIGH	±199.9 µm, resolution: 0.1 µm
	LOW	—
	AUTO	±1999 µm, resolution: 1 µm
Indication error		±1% rdg ±1 digit *1
Zero-point adjustment range		±50 µm or more
Display		3-digit LED display & polarity (-)
Response speed		Approx. 400 ms (max)
Analog output		DC±1 V/full scale *2
Accuracy guaranteed temperature range		24°C ±5°C
Operating temperature range		0°C to 50°C
Power supply		100 to 240 V AC ± 10% 50/60 Hz Approx. 5 VA *3
Dimensions		110 (W) × 175 (D) × 185 (H) mm
Weight		Approx. 1.0 kg

*1 Performance assurance range: ±99.9 µm when HIGH is selected and ±999 µm when LOW is selected. Note that the assurance differs depending on the display range and indication error.
*2 DC±1 V is the output at ±100.0 µm when HIGH is selected and ±1000 µm when LOW is selected.
*3 The power cable attached to the unit has a rating of 125 V/10 A. If using the unit with a higher voltage, procure and use a high-voltage cable with a suitable rating.

Detachable cable
The cable can be directly connected to a controller, such as a sequencer. Since the cable can be removed, even if the cable gets damaged, the instrument can continue to be used after replacing just the cable.

Judgment indicator lamp
This lamp indicates the rank judged based on the limits set for sorting.

(+) limit setting knob

(-) limit setting knob

Set the limit freely and easily just by turning the knobs.

Spindle (internal)
The ball sliding adopted for the spindle action ensures outstanding durability.

Rubber bellows
The mechanism has strong resistance against dust and drips. It can withstand use on production lines, at processing sites, and so forth.

Signal Indicators
TRI-METRON

Micro Indicators
Mu-METRON

Signal Indicators & Micro Indicators

These analog models of signal indicators and micro indicators have simple structures that do not require amplifiers. They are the most cost-efficient options for simple pass/fail measurement. We offer Mu-METRON high-precision mechanical micro indicators, and TRI-METRON with electrical contacts incorporated into Mu-METRON. The LP type enables you to confirm pass or fail judgment results even from a distance via lamp lighting.

TRI-METRON
Mu-METRON

How to use TRI-METRON

STEP 1 Checking
Move the spindle up and down to confirm that the indicator moves over the entire scale range.

STEP 2 Zero point setting
Use the master gauge to adjust the detector's zero-point position. Loosen the clamp screw, move the detector up and down until the needle points to zero. Then tighten the clamp screw.

STEP 3 Fine adjustment
If the needle does not point to zero after moving the detector up and down, turn the scale plate to adjust it to zero.
Once the zero-point position has been adjusted, move the spindle up and down two or three times. Ensure that the needle returns to the zero-point position.

STEP 4 Minus tolerance
Remove the master gauge.
Turn the left limit setting dial to the right until the needle points to the minus tolerance for measurement.

STEP 5 Plus tolerance
Press the spindle fully against the workpiece and turn the right limit setting dial to the right until the needle points to the plus tolerance for measurement.

STEP 6 Tolerance check
After setting the minus and plus tolerances, move the spindle up and down two or three times. Ensure that the needle can move between the minus limit and the plus limit (within the product's tolerance range).

Signal Indicators
TRI-METRON

1S series
1S-□□□LP
1S-□□□

2S series
2S-□□□

Micro Indicators
Mu-METRON

2M-100
3M-100
4M-100P

Accessories
Signal Indicators/Micro Indicators
TRI-METRON
Mu-METRON

Contact points
F-001, 101, 201, 301
F-002
F-171
F-105
F-106
F-501
F-502
F-503
F-504
F-505
F-507
F-508

Rubber bellows
M-131

Back mounts
F-M100
F-M101
F-M103-1
C-M100
C-M101
C-M103-1

Release
M-140

Finger lever
M-129

Indicator bush
M-150

Lug holder
SMA-0417

1S-□□□LP

1	10	0.78	0.98	±0.05	±0.5	ON/OFF	1	8
µm Resolution	µm Resolution	N Measuring Force	N Measuring Force	mm Measurement Range	mm Measurement Range	Output	m Cable Length	mm Stem Diameter

These signal indicators can be directly connected to a controller, such as a sequencer. The green and red judgment indication lamps enable you to visually confirm pass/fail results.

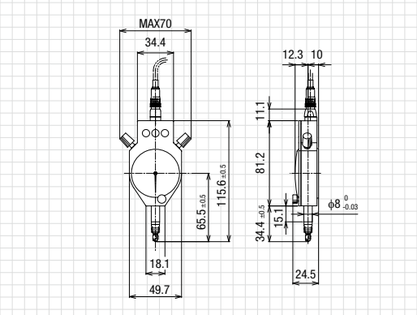

Model		1S-100LP	1S-010LP
Graduation		1 µm	10 µm
Range		±0.05 mm	±0.5 mm
Precision		±1 µm	±5 µm
Measuring force		0.98 N	
Spindle stroke		2.5 mm	
Contact rating		24 V DC 4 mA (resistance load)	
Standard attachments	Contact point	F-001	
	Back	Flat back (F-M103-1)	
	Cable	1 m	
	Rubber bellows	M-131	
Option	Release	—	

◇In the 1S series, the contacts are insulated from the body.
◇All measuring forces are for the state in which no rubber bellows is attached. (The measuring force is about 5 to 15 g higher if a rubber bellows is attached.)

1S-□□□

1	10	20	0.98	0.78	±0.05	±0.5	ON/OFF	1.5	8
µm Resolution	µm Resolution	µm Resolution	N Measuring Force	N Measuring Force	mm Measurement Range	mm Measurement Range	Output	m Cable Length	mm Stem Diameter

These are small-size signal indicators.

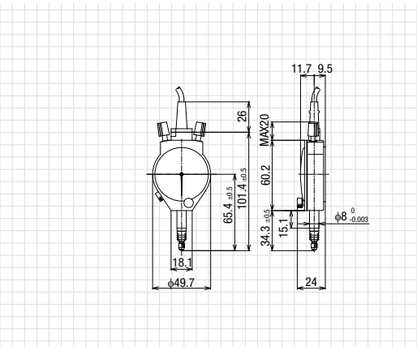

Model		1S-100	1S-010	1S-010FIS
Graduation		1 µm	10 µm	20 µm
Range		±0.05 mm	±0.5 mm	±0.5 mm
Precision		±1 µm	±5 µm	±15 µm
Measuring force		0.98 N		0.78 N
Spindle stroke		2.5 mm		
Contact rating		24 V DC 4 mA (resistance load)		
Standard attachments	Contact point	F-001		
	Back	Flat back (F-M103-1)		
	Cable	3SMA-0061-1.5 (1.5 m)		
	Rubber bellows	M-131		
Option	Release	M-140		

◇In the 2S series, the contacts are connected to the body.
◇All measuring forces are for the state in which no rubber bellows is attached. (The measuring force is about 5 to 15 g higher if a rubber bellows is attached.)

2S-□□□

1	10	20	1.98	0.78	±0.05	±0.1	±0.6	ON/OFF	1.5	8
µm Resolution	µm Resolution	µm Resolution	N Measuring Force	N Measuring Force	mm Measurement Range	mm Measurement Range	mm Measurement Range	Output	m Cable Length	mm Stem Diameter

This low-priced version features a large display.

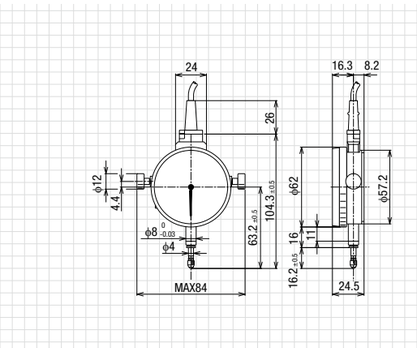

Model		2S-100	2S-200	2S-010	2S-010FIIS
Graduation		1 µm	2 µm	10 µm	20 µm
Range		±0.05 mm	±0.1 mm	±0.6 mm	±0.5 mm
Precision		±1 µm	±1.5 µm	±5 µm	±15 µm
Measuring force		1.18 N			0.78 N
Spindle stroke		2.8 mm			
Contact rating		24 V DC 4 mA (resistance load)			
Standard attachments	Contact point*1	F-001			
	Back	Flat back (F-M101)			
	Cable	3SMA-0061-1.5 (1.5 m)			
	Rubber bellows	*2			
Option	Release	M-140			

◇In the 2S series, the contacts are connected to the body.
◇All measuring forces are for the state in which no rubber bellows is attached. (The measuring force is about 5 to 15 g higher if a rubber bellows is attached.)
*1 Various other contact points are available.
*2 In the 2S series, rubber bellows can be installed as an option.

Optional cable	Model	3SMA-0061-3
	Length	3 m

2M-100 • 3M-100 • 4M-100

1	0.588	0.784	±0.05	無	8
µm Resolution	N Measuring Force	N Measuring Force	mm Measurement Range	Output	mm Stem Diameter

2M-100

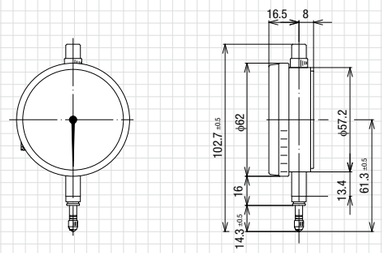

3M-100

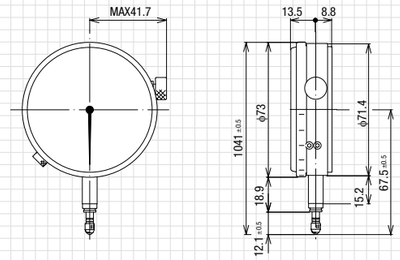

4M-100P

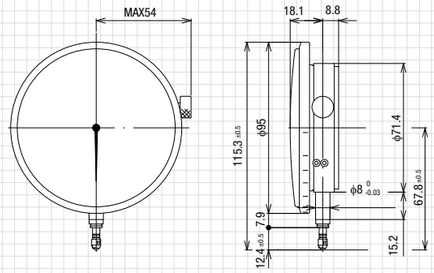

The low-priced version has a graduation of 1 µm.

The standard type has a graduation of 1 µm.

The high-precision type has a graduation of 0.5 µm.

Model		2M-100	3M-100	4M-100
Graduation		1 µm	1 µm	0.5 µm
Range		±0.05 mm	±0.05 mm	±0.05 mm
Precision		±1 µm	±1 µm	±0.5 µm
Measuring force		0.784 N	0.588 N	
Spindle stroke		2.8 mm		
Standard attachments	Contact point *1	F-001		
	Back	F-M101	F-M100	
	Release	M-140		
Option	Rubber bellows	M-131		

*1 Various other contact points are available.

Horizontal Stands

Measuring Stands

Our lineup of horizontal stands can be used to measure inner and outer diameters. By attaching SA series displacement sensors or Mu-METRON to these stands, you can obtain measurement values with minimal measurement error. In addition, you can measure abnormally shaped workpieces or grooves by using special contact points. Use the H-2 series to measure outer diameters and the BST series to measure inner diameters.

Horizontal Stands

Internal gear spline measurement BST-2B, BST-1B (3LB)

You can measure the over-pin diameter, large diameter, and small diameter using the BST-2B or BST-1B (3LB) inner diameter measuring instruments and a special-order contact point. Although different measurement methods are used for odd and even numbers of teeth, the following gives some measurement examples.
* Since these measurements are comparative measurements against a master (reference work), a master workpiece is required.

Even No. of teeth	Odd No. of teeth	Contact point selection condition
Over-pin diameter 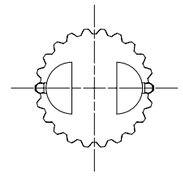	Over-pin diameter 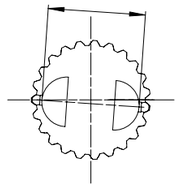	For both even and odd numbers of teeth, measurement can be performed using a two-point-type ball contact point. However, to ensure that the contact point does not touch the large diameter surface, you must consider the ball diameter at the tip or whether the ball has been cut into a D-shape.
Large diameter 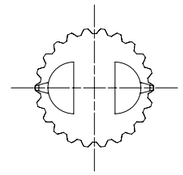	Large diameter 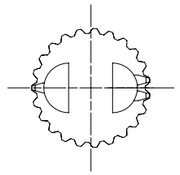	To enable the contact point to come into contact with the large diameter surface, it is necessary to select the ball diameter so that it does not interfere with the gear surface. Our standard contact point has a diameter of 1 mm.
Small diameter 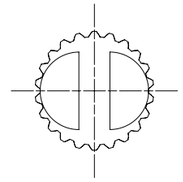	Small diameter 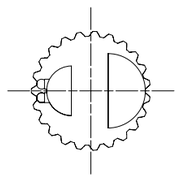	For an even number of teeth, two R-shaped contact points are used. For an odd number of teeth, two ball contact points and an R-shaped contact point are used.

Horizontal Stands

Outer diameter measurement
H-2B
H-2LB

Inner diameter measurement
BST-1B
BST-2B
BST-3LB

H-2B • H-2LB

0–25 mm Measurement Range | 0–45 mm Measurement Range

These stands support measurement of outer diameters within the range of 0 to 25 mm.

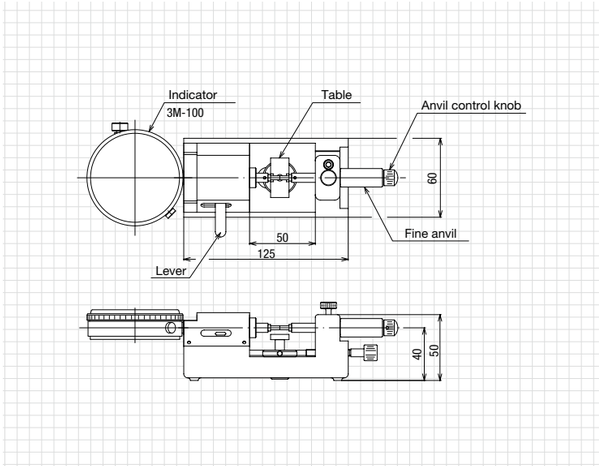

Model	H-2B		H-2LB	
	Without indicator	With indicator 3M-100	Without indicator	With indicator 3M-100
Measurement range	0 to 25 mm		18 to 45 mm	
Precision	—		—	
Measuring force	As per the indicator's measuring force		As per the indicator's measuring force	
Standard contact point *1	F-150		F-150	

*1 Various other contact points are available.

BST-2B

2–23 mm Measurement Range

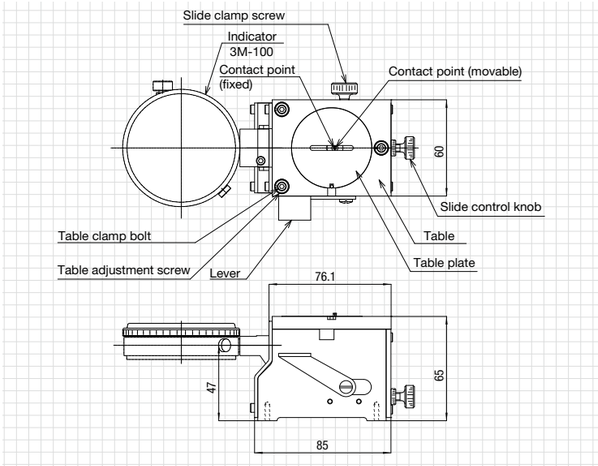

This stand supports measurement of inner diameters within the range of 2 to 23 mm.

Model	BST-2B	
	Without indicator	With indicator 3M-100
Measurement range	ϕ2~23 mm	
Measurement depth adjustment	3 mm	
Measuring force	1.47N	
Contact point stroke	1 mm	
Standard contact point	F-060	

◇Because this inner diameter measuring instrument is a comparative measuring instrument, a reference gauge is required. Error will result if the dimensional difference between this gauge and the target workpiece is large.

BST-1B

4–67 mm Measurement Range

This stand supports measurement of inner diameters within the range of 4 to 67 mm.

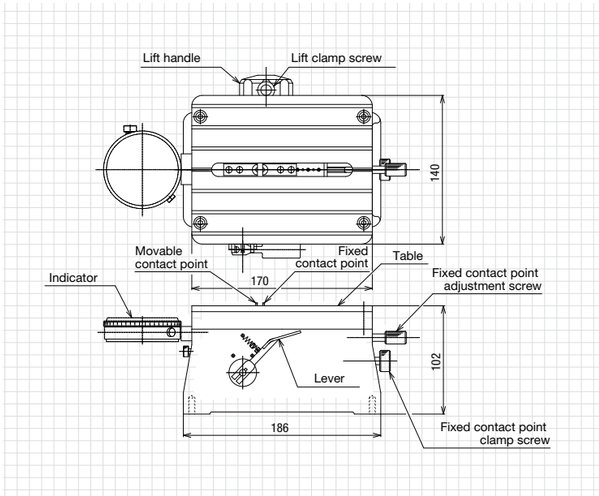

Model	BST-1B	
	Without indicator	With indicator 3M-100
Measurement range	ϕ4 to 67 mm	
Measurement depth adjustment	15 mm	
Measuring force	0.98 to 2.94 N	
Contact point stroke	3 mm	
Standard contact point	F-050	

◇Because this inner diameter measuring instrument is a comparative measuring instrument, a reference gauge is required. Error will result if the dimensional difference between this gauge and the target workpiece is large.

BST-3LB

10–260 mm Measurement Range

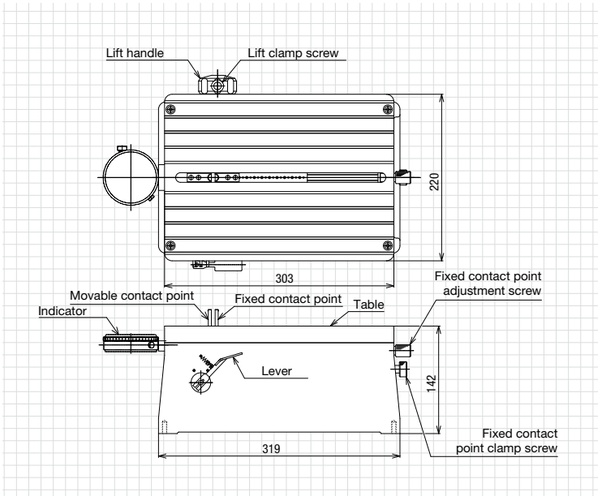

This stand supports measurement of inner diameters within the range of 10 to 260 mm.

Model	BST-3LB	
	Without indicator	With indicator 3M-100
Measurement range	ϕ10 to 260 mm	
Measurement depth adjustment	15 mm	
Measuring force	0.98 to 4.90 N	
Contact point stroke	5 mm	
Standard contact point	F-070, F-071. F-072, F-073	

◇Because this inner diameter measuring instrument is a comparative measuring instrument, a reference gauge is required. Error will result if the dimensional difference between this gauge and the target workpiece is large.

Option & Accessories

Connector Cables

Product No.	SA-CD-SH□M			SA-SD-SH□M		
	2M	5M	10M	2M	5M	10M
	2 m	5 m	10 m	2 m	5 m	10 m
Shape (Straight)	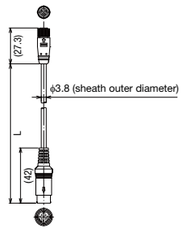			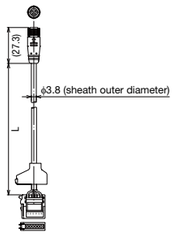		

Product No.	SA-CD-SHL□M			SA-SD-SHL□M		
	2M	5M	10M	2M	5M	10M
	2 m	5 m	10 m	2 m	5 m	10 m
Shape (L-shaped)	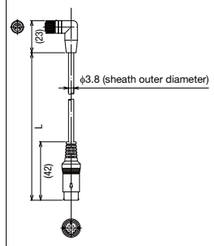			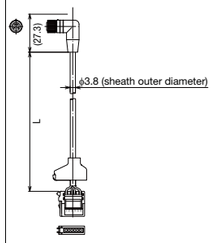		

Output Cables

Shape	Straight	Output	Product No.
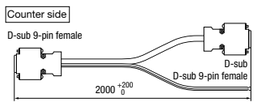	2 m	RS-232C	**SA-CD-RS2**
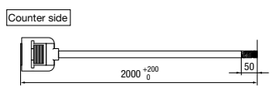	2 m	BCD	**SA-CD-BCD2**

SA-CD1N (RS, BO) Adapter

Shape	Output	Product No.
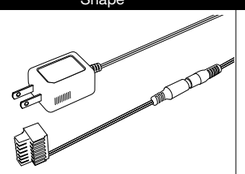	100 V	**AC-001**

EM-SA1R Output Cables

Shape	Straight	Output	Product No.
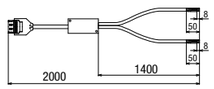	2 m	Analog +IO	**EM-SA1-IA2**
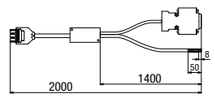	2 m	RS232C+ IO	**EM-SA1-IF2**
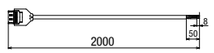	2 m	IO	**EM-SA1-IO2**
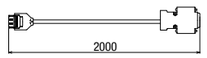	2 m	RS232C	**EM-SA1-RS2**

EM-SA1R Conversion Cable

Shape	Dimensions	Product No.
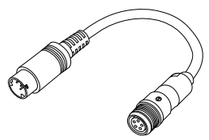	15 cm	**3SEA-2834**

* Required when connecting a detector to EM-SA1R.

TRI-METRON
Optional cable

Optional Cable

Shape	Straight	Product No.
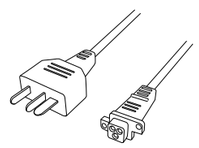	3 m	**3SMA-0061-3**

Contact Points

Shape	Dimensions	Product No. Steel	Carbide	Ceramic	Nylon
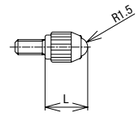	L=7	**F-001**	**F-101**	**F-201**	**F-301**
	L=9	**F-002**			
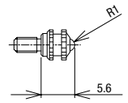	L=5.6		**F-171**		
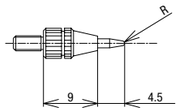	R=0.4		**F-105**		
	R=0.6		**F-106**		
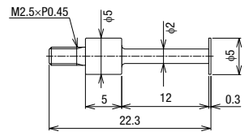	L1=5 L2=12.3 ϕD=5	**F-501**			
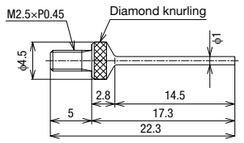	L1=2.8 L2=14.5 ϕD=ϕ1.0	**F-502**			
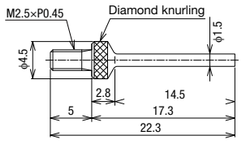	L1=2.8 L2=14.5 ϕD=ϕ1.5	**F-503**			
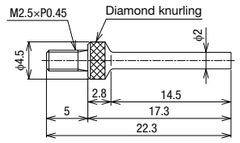	L1=2.8 L2=14.5 ϕD=ϕ2	**F-504**			
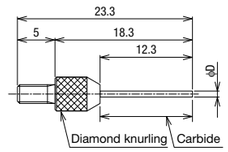	L1=6 L2=12.3 ϕD=ϕ0.5		**F-505**		
	L1=6 L2=12.3 ϕD=ϕ1.0		**F-507**		
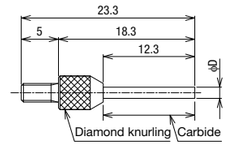	L1=6 L2=12.3 ϕD=ϕ2.0		**F-508**		

* The fixing screw is M2.5P0.45. It can be used commonly for the SA series, ELEMETRON, TRI-METRON, Mu-METRON, etc.

For ELEMETRON Lever Type

Shape	Dimensions		Applicable model	Product No. Carbide
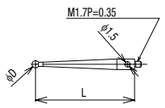	φD=φ2	L =28	DTH-L	**F-138**
	φD=φ1	L =28	DTH-L	**F-139**
	φD=φ2	L =18.3	DTH-L□□U (Universal type)	**F-118**

Backs

Shape Flat back F

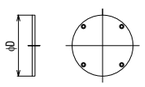

Model	Dimensions (mm)	No. of holes	Product No.
3M-□□□ 4M-100P	φD=φ68	4	**F-M100**
2S-□□□ 2M-100	φD=φ53.2	4	**F-M101**
1S-□□□ 1S-100LP 1S-010LP	φD=φ47.1	3	**F-M103-1**

Shape Center back C

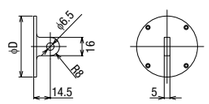

Model	Dimensions (mm)	No. of holes	Product No.
3M-□□□ 4M-100P	φD=φ68	4	**C-M100**
2S-□□□ 2M-100	φD=φ53.2	4	**C-M101**
1S-□□□	φD=φ47.1	3	**C-M103-1**

Release

Shape	Applicable models	Product No.
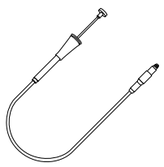	1S, 2S, 2M, 3M, 4M	**M-140**

Finger lever

Shape	Applicable models	Product No.
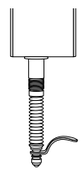	Can be installed in any model with M2.5 contact points.	**M-129**

Indicator bush

Shape	Applicable models	Product No.
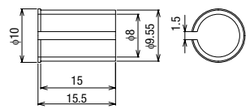	All models with an 8-mm diameter stem can be fixed with this indicator bush.	**M-150**

Lug holder

Shape	Product No.
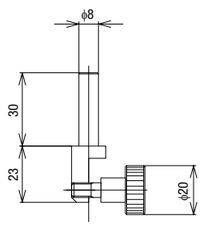	**SMA-0417**

Rubber bellows

Shape	Applicable models	Product No.
	1S-□□□ 2S-□□□ DTH-P□□□ 2M - 100 3M - 100 4M - 100P	**M-131**
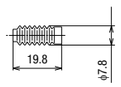	SA - S110, SA - S110 / 03N SA - S510, SA - S510 / 03N	**M-137**
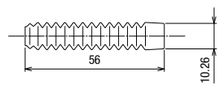	SA - S532	**M-142**
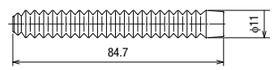	SA - S550	**M-143**

Table plates (hardened lap)

Shape	Applicable stand	Dimensions (mm)	Product No. Hardened lap
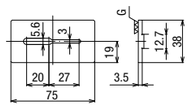	BST-1B (Auxiliary table)		**TP-106*1**
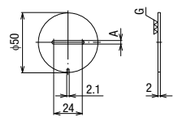	BST-2B	A=3	**TP-107**
		A=5.6	**TP-108**

*1 Make-to-order manufacturing

Contact Points (Contact points come in sets of two: one for the movable side and the other for the fixed side.)

Contact points (BST-1B)

Product No.	F-050	F-051	F-052	F-053
Shape	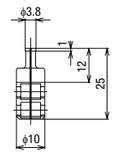	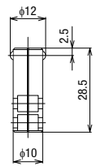	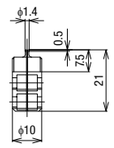	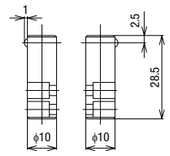
Measurement range (mm)	ϕ4 to 59	ϕ12 to 67	ϕ1.5 to 56	ϕ87 to 126
Measurement depth (mm)	0 to 7	0 to 12	0 to 2.5	0 to 12

◇Made of SK carbon hardened steel. ◇F-050 is provided as standard.

Contact point (BST-2B)

Product No.	F-060	F-061	F-062
Shape	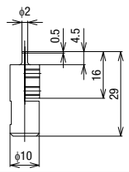	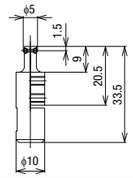	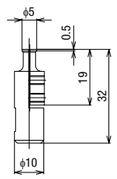
Measurement range (mm)	ϕ2 to 20	ϕ5 to 23	ϕ5 to 23
Measurement depth (mm)	0 to 2	2 to 5	2 to 5

◇Made of SK carbon hardened steel. ◇F-060 is provided as standard. Note that a table plate (TP-108) is required when using F-061 or F-062.

Contact point (BST-3LB)

Product No.	F-070*	F-071*	F-072*	F-073*
Shape	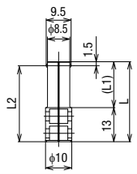		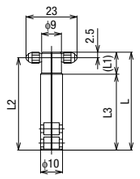	
Dimensions (mm)	L =43.5 L1=30.5 L2=42	L =30.5 L1=17.5 L2=29	L =44.5 L1=10 L2=42 L3=34.5	L =31.5 L1=10 L2=29 L3=21.5
Measurement range (mm)	ϕ10 to 180	ϕ10 to 180	ϕ25 to 203 (ϕ105 to 260)	ϕ25 to 203 (ϕ105 to 260)
Measurement depth (mm)	13 to 28	0 to 15	13 to 28	0 to 15

◇Made of SK carbon hardened steel. ◇Can be used with BST-1B. * Make-to-order manufacturing

Contact point (H-2B, H-2LB)

Product No.	F-150	F-152
Shape	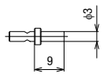	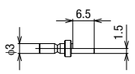
Measurement range (mm)	ϕ4 to 59	ϕ12 to 67
Measurement depth (mm)	0 to 7	0 to 12

◇Made of carbide.

Product	Model
[Amplifier] ELEMETRON	DTM-FA
I/O interface card (For DTM-FA, DGM-FC)	RK-R
	RK-P
	RK-O
	BCD-T
	BCD-O
	RS232C
	RS232C-9F
	CN-N
	CN-C
[Amplifiers] ELEMETRON	DTM-CD
	DTM-CA
	DTM-CA/H
	DTM-CB/1V
	DTM-CB/5V
	DTM-CB/10V
	DTM-MD4
Light boxes for signal indicators	TLB-1 TLB-7 TLB-3L TLB-3B TLB-5L
[Detectors] DIGIMETRON DGM series	DGM-0501B
	DGM-0505B
	DGM-1001B
	DGM-1005B
	DGM-2501B
	DGM-2505B
	DGM-0201BT
	DGM-0205BT
Machining sound level detectors	GPH-2N
TRI-METRON	1S-010BF
[Counter] DIGIMETRON	DGM-FC
All dial gauge models (including the lever type)	C-105E
	C105EP
	C-105B
	C-106N
	C-107N
	C-107S
	C-107B
	C-108
	2A-104
	2A-104R
	2A-254

Product	Model
All dial gauge models (including the lever type)	2A-254R
	2B-104
	2B-104P
	2B-254
	0B-054
	0B-054P
	T-201
	T-202
	T-203
	TC-100
	TC-101
	TC-102
	TC-103
[Checker] TRI-METRON	CHK-001
Signal limit	2BF-3
	CLS-1L
	4B-5
[Amplifier] ELEMETRON	DTM-AM
[Detectors] ELEMETRON	DTH-P50L
	DTH-P70W
Paper thickness measuring instrument	MEI-10B
Cable for sequencers	TRC-200
TRI-METRON	1S-010BT
	1S-100BT
Mini-METRON	1T-100
	1T-100D
	1T-200D
Small bore measuring instruments (Bore Check)	MEI-6D
	MEI-6E
	MEI-6F
	2M-250S
[Detector] DIGIMETRON	IPD-C1003
[Counter] DIGIMETRON	DGB-FCB1
	DGB-FCB1/BO
	DGB-FCB1/RS
	IPD-FCC1
	IPD-FCC1/RS
	IPD-FCC1/BO
Rubber hardness tester / soft material hardness tester	CH-R01/V
	CH-R01/IRHD